PKD

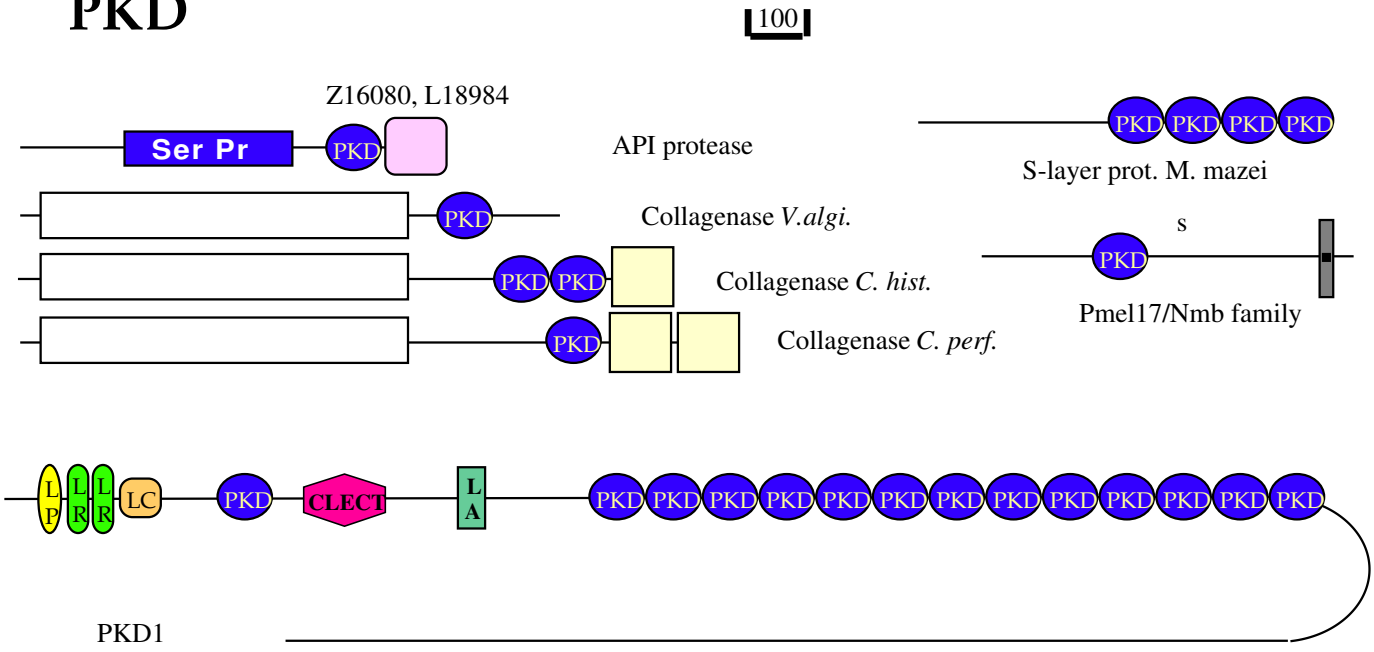

see Cell 81 (95) 10-20